## 4.5 Dimension sheets [mm]

42 032 03 01

### F27..

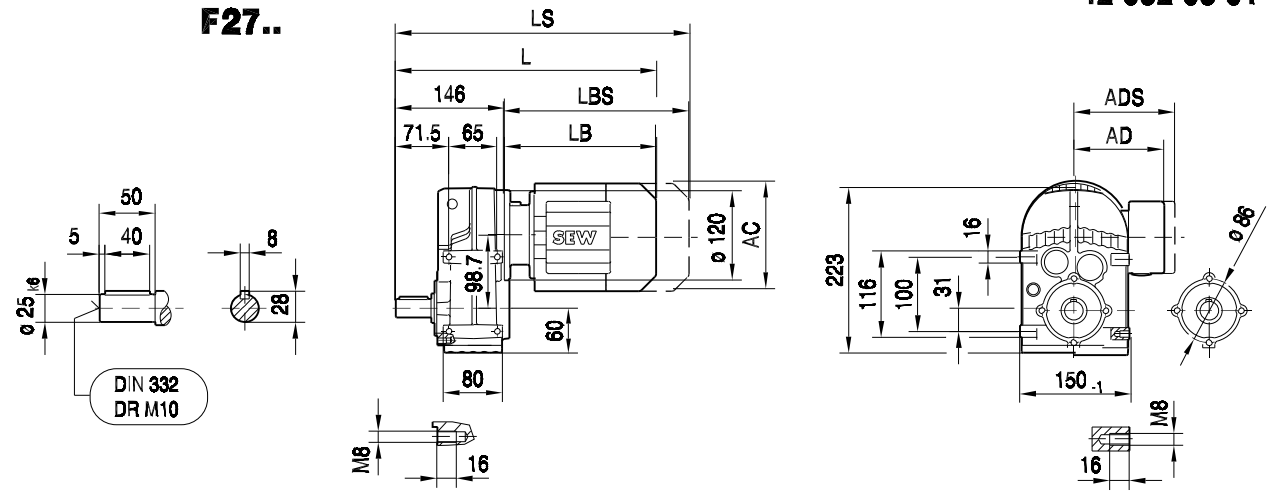


### FA27B..

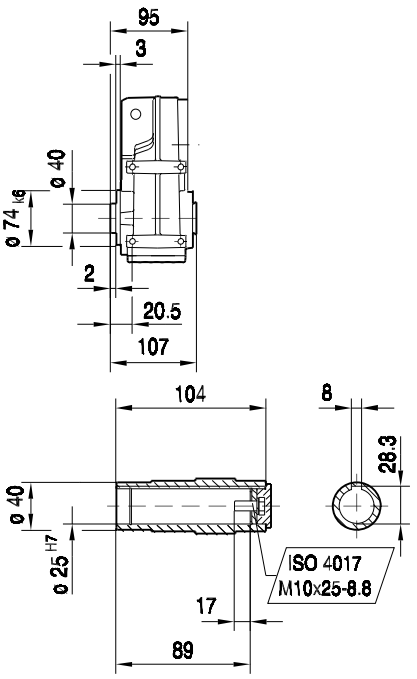


### FH27B..
max. DT80..

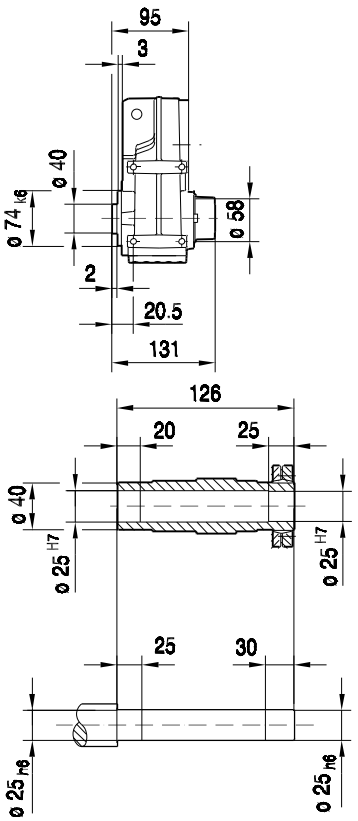


### FV27B..

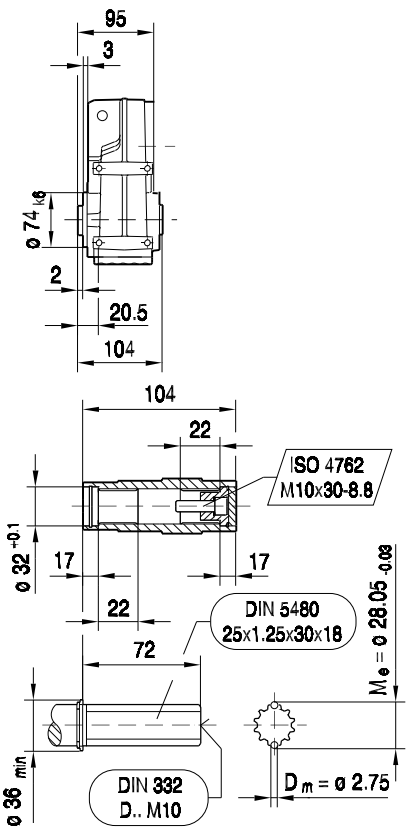


| (→ 📖 14) | DR63.. | DT71D | DT80.. | DT90.. | | | | | | | |
|---|---|---|---|---|---|---|---|---|---|---|---|
| AC | 132 | 145 | 145 | 197 | | | | | | | |
| AD | 105 | 122 | 122 | 154 | | | | | | | |
| ADS | 105 | 127 | 127 | 161 | | | | | | | |
| L | 337 | 352 | 402 | 422 | | | | | | | |
| LS | 392 | 415 | 465 | 507 | | | | | | | |
| LB | 191 | 206 | 256 | 276 | | | | | | | |
| LBS | 246 | 269 | 319 | 361 | | | | | | | |